THIS DWG. IS SOLE PROPERTYOF **NEOMETRIX ENGINEERING PVT. LTD.**
UNAUTHORISED USE OF THIS DWG. OR MAKING PRODUCT AS PER THIS DWG.
WITHOUT OUR PERMISSION OR ANY OTHER MISUSE IS NOT PERMITTED.

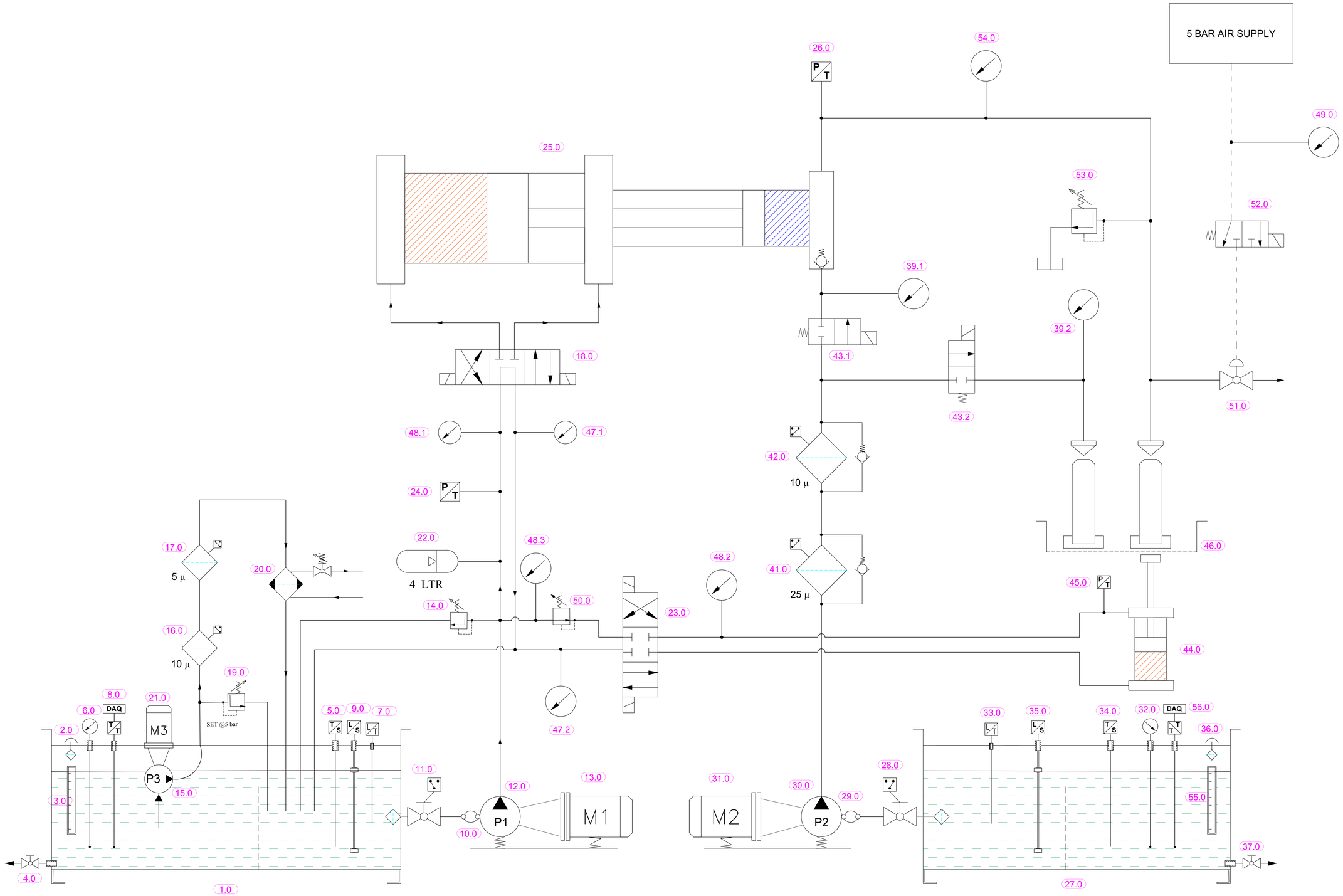

NOTE: THIS IS TENTATIVE HYDRAULIC CIRCUIT DRAWING, SUBJECTED TO CHANGE. (FOR REFERENCE ONLY)

†††NEOMETRIX www.neometrixgroup.com			NEOMETRIX ENGINEERING PVT. LTD. E-148, Sector-63, Noida, UP-201301 Tel. No. :- 0120-4500800 Fax No. :- 0120-4500888 Email :- contact@neometrixgroup.com					
MAIN TITLE	HYDRAULIC PRESSURE TESTING MACHINE			Q.A No.				01
SUB - TITLE	HYDRAULIC CIRCUIT DIAGRAM			Cross Ref. Doc. No.				
CODE	A2118			Customer Dwg./Ref. No.				
CUSTOMER	-----			Note :				
END USER	-----							
PO. No.	-----							
PROJECTION	REVISED BY & DATE	---	---					
	DRAWN BY & DATE	Z.A.	03-AUG-2021	Size	Scale	Sheet No.	Sheet OF	NEO. DWG. No.	REV
	CHECKED BY & DATE	PT	03-AUG-2021	A3	NTS	01	01	T-DAP-A2118-HDWG	00
	APPROVED BY & DATE	S.P.S	03-AUG-2021						