THIS DWG. IS SOLE PROPERTY OF NEOMETRIX ENGINEERING PVT LTD.
UNAUTHORISED USE OF THIS DWG. OR MAKING PRODUCT AS PER THIS DWG.
WITHOUT OUR PERMISSION OR ANY OTHER MISUSE IS NOT PERMITTED.

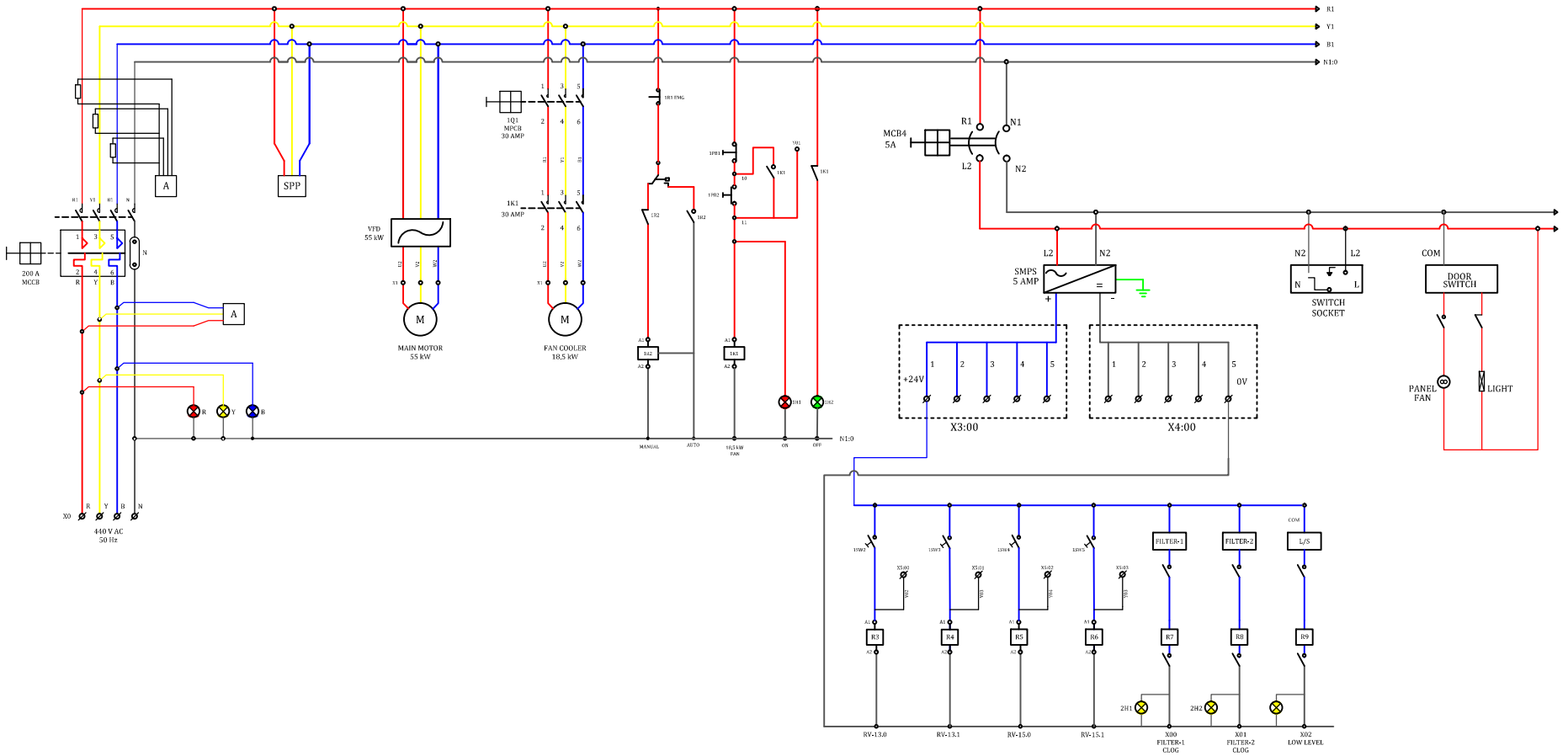

ABBREVIATIONS :
HSU - Hydraulic Suspension Unit
DBT - Damper Test Bench
STB - Static Test Bench
K - Connector
PB - Push Button

DAMPER TEST BENCH - ELECTRICAL CIRCUIT

NEOMETRIX
www.neometrixgroup.com

NEOMETRIX ENGINEERING PVT.LTD.
E-148, Sector-63, Noida, UP-201301
Tel. No.- 0120-4500800
Fax No.- 0120-4500888
E Mail: contact@neometrixgroup.com

MAIN TITLE	HYDRAULIC TEST EQUIPMENT FOR HSU
SUB-TITLE	DAMPER TEST BENCH - ELECTRICAL CIRCUIT
CODE	A1782
CUSTOMER	L&T
END-USER	L&T
TENDER NO.	

PROJECTION	DRAWN BY & DATE	KH	26/12/2017	SIZE	SCALE	SHEET No.	OF	NEO. DWG. NO.	Rev.
	CHECKED BY & DATE	AA	26/12/2017	A2	NTS	01	02	T-PED-A1782-EDWG-DTB	00
	APPROVED BY & DATE	SPS	26/12/2017						

Q.A. No.
CROSS REF. DWG.
CONTROLLED DWG./ SER. No.
NOTES: