# ARRANGEMENT - THE JACK IN THE REACTION FRAME

NOT TO SCALE

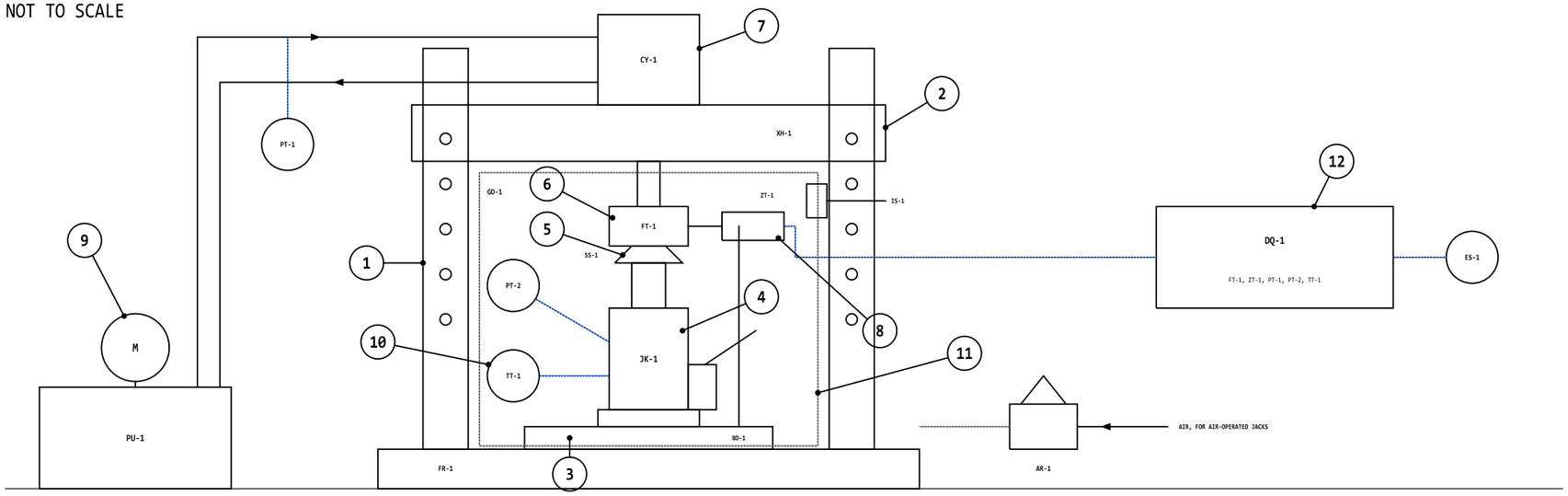


THE JACK JK-1 STANDS ON THE BED BD-1 UNDER THE LOAD CELL FT-1 AND A SPHERICAL SEAT SS-1; IT PUMPS UP AGAINST THE FRAME, OR THE LOADING CYLINDER CY-1 PUSHES DOWN ON IT FOR THE PROOF;
THE CROSSHEAD XH-1 IS PINNED TO SUIT THE JACK, THE GUARD GD-1 STAYS CLOSED WHILE LOAD IS ON, AND DQ-1 RECORDS FORCE, RAM POSITION, PRESSURE AND TEMPERATURE TOGETHER AGAINST TIME

## NOTES

1. REFERENCE ARRANGEMENT OF A HYDRAULIC JACK TEST RIG. TAGS AND LETTERS ONLY: NO CAPACITY, LOAD, STROKE, PRESSURE, TEMPERATURE OR TIME VALUE IS GIVEN.
2. THE ARRANGEMENT SHOWS THE FRAME, THE JACK UNDER TEST, THE LOAD STACK, THE LOADING CYLINDER AND POWER UNIT, THE SENSORS, THE GUARD AND THE DATA ACQUISITION. ES-1 IS THE EMERGENCY STOP.
3. DETAIL A: THE LOAD STACK. DETAIL B: THE LOADING CIRCUIT, SIMPLIFIED. DETAIL C: THE JACK'S OWN CIRCUIT, SIMPLIFIED. NO PERSON IS DRAWN.
4. THE SEQUENCE AND THE CURVES ARE ON SHEET 002. SENSORS, PUMPS, VALVES AND CYLINDERS ARE CATALOGUE ITEMS, BOUGHT IN. THE MAKER'S MANUAL AND THE PROJECT'S OWN STANDARD GOVERN THE TEST.

## DETAIL A - THE LOAD STACK

NOT TO SCALE

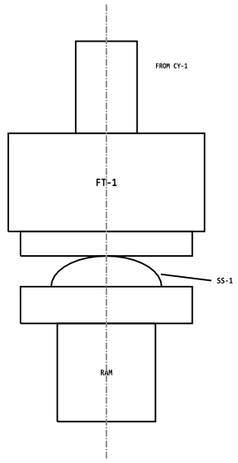


THE DOMED SEAT LETS THE FACES SETTLE SQUARE, SO THE LOAD CELL READS THE PUSH ALONG THE RAM AND THE RAM IS NOT FORCED SIDEWAYS BY A TILTED OR OFFSET CONTACT

## DETAIL B - THE LOADING CIRCUIT

NOT TO SCALE

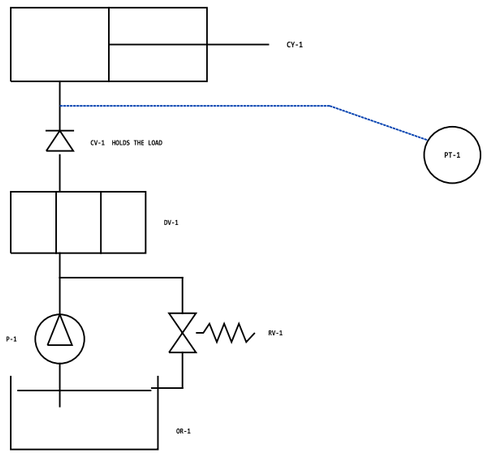


THE PUMP BUILDS THE PROOF LOAD SLOWLY, THE RELIEF RV-1 KEEPS IT BELOW WHAT THE FRAME IS RATED FOR, AND THE CHECK VALVE CV-1 HOLDS IT; RETURN LINES ARE LEFT OUT

## DETAIL C - THE JACK ITSELF

NOT TO SCALE

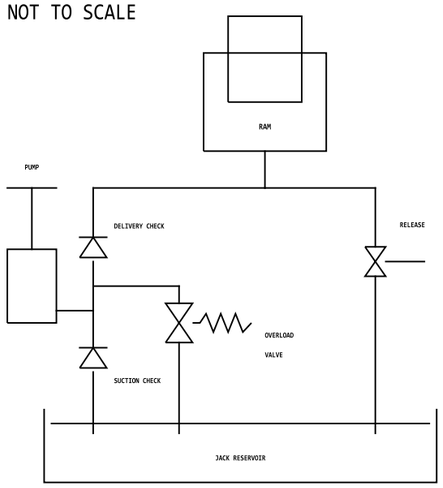


A SIMPLIFIED HAND-PUMPED JACK; WHERE THE OVERLOAD VALVE SITS DIFFERS BETWEEN DESIGNS, SO THE MAKER'S MANUAL LEADS

## ITEMS

| ITEM | DESCRIPTION |
|---|---|
| 1 | REACTION FRAME FR-1 |
| 2 | CROSSHEAD XH-1, PINNED TO HEIGHT |
| 3 | BED BD-1 |
| 4 | JACK UNDER TEST JK-1 |
| 5 | SPHERICAL SEAT SS-1 |
| 6 | LOAD CELL FT-1 |
| 7 | LOADING CYLINDER CY-1 |
| 8 | POSITION SENSOR ZT-1 |
| 9 | POWER UNIT PU-1, SENSOR PT-1 |
| 10 | TEMPERATURE TT-1, TAPPING PT-2 |
| 11 | GUARD GD-1, INTERLOCK IS-1 |
| 12 | DATA ACQUISITION DQ-1 |

**REFERENCE CONFIGURATION - NOT FOR CONSTRUCTION**

**NEOMETRIX DEFENCE LIMITED**
ENGINEERED IN NOIDA - INDIA

**HYDRAULIC JACK TEST RIG - REFERENCE CONFIGURATION**

**ARRANGEMENT AND DETAILS**

FRAME, LOADING CYLINDER, SENSORS, GUARD AND THREE DETAILS

| DWG NO | SCALE @ A3 | SHEET | REV |
|---|---|---|---|
| NMX-HJT-126-001 | NTS | 1 OF 2 | A |
| DATE | UNITS | DRAWN | STATUS |
| 28-11-2026 | TAGS ONLY | NMX-DO | REFERENCE |

# SEQUENCE OF WORK - ONE JACK ON THE RIG

NOT TO SCALE

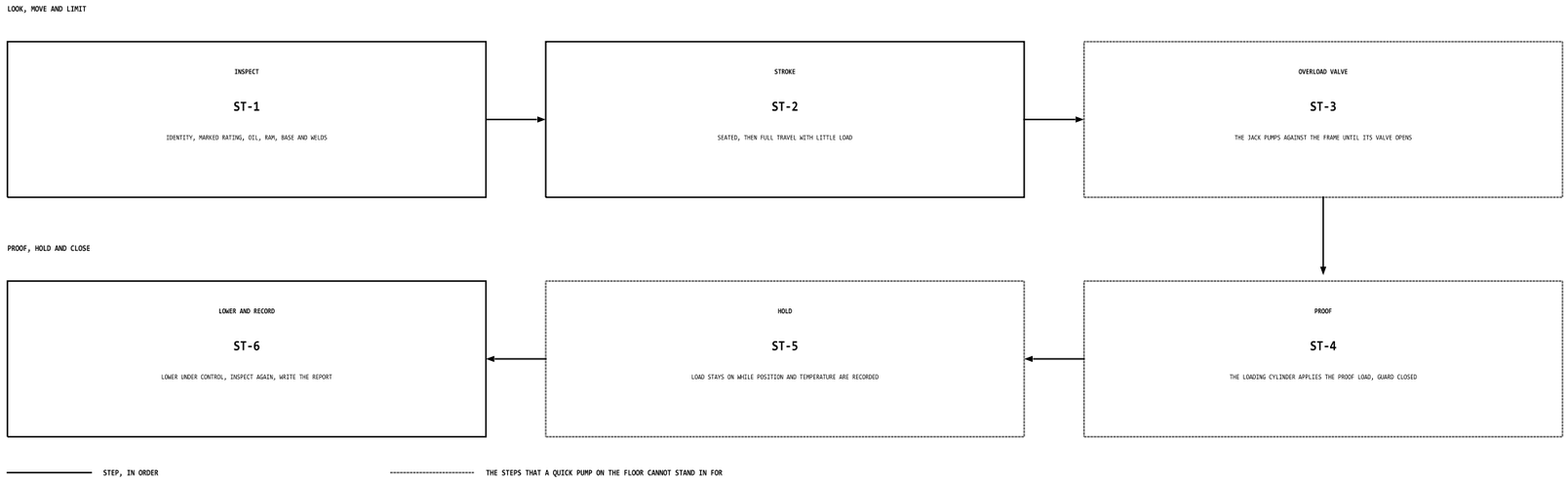


## NOTES

1. REFERENCE SEQUENCE AND CURVES OF A HYDRAULIC JACK TEST RIG. TAGS AND LETTERS ONLY: NO CAPACITY, LOAD, STROKE, PRESSURE, TEMPERATURE OR TIME VALUE IS GIVEN.
2. THE SEQUENCE: INSPECT ST-1, STROKE ST-2, OVERLOAD VALVE ST-3, PROOF ST-4, HOLD ST-5, AND LOWER AND RECORD ST-6. THE JACK IS INSPECTED AGAIN AFTER LOADING.
3. DETAILS A TO C ARE COMPUTED FROM SIMPLE RELATIONS IN RELATIVE UNITS: A PICTURE OF THE IDEA, NOT A MEASUREMENT. THE ARRANGEMENT IS ON SHEET 001.
4. PROOF LOAD, HOLD TIME, ALLOWED CREEP AND THE VALVE SETTING COME FROM THE JACK MAKER'S MANUAL AND THE STANDARD THAT APPLIES. THE RIG DOES NOT SET THEM.

## DETAIL A - THE HOLD

NOT TO SCALE - COMPUTED

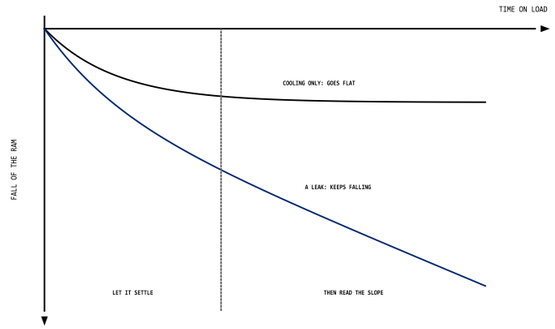


BOTH JACKS FALL AT FIRST AS WARM OIL COOLS AND SHRINKS. THE SOUND ONE THEN STAYS; THE LEAKING ONE GOES ON AT A STEADY RATE. COMPUTED IN RELATIVE UNITS: A PICTURE OF THE IDEA, NOT A MEASUREMENT

## DETAIL B - THE OVERLOAD VALVE

NOT TO SCALE - COMPUTED

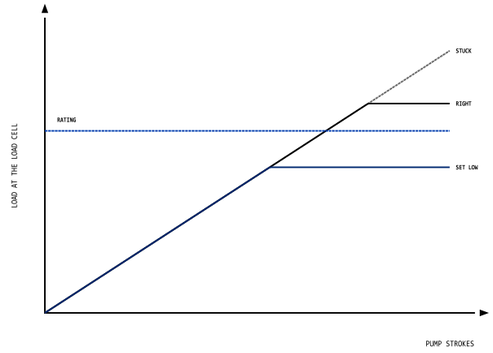


EACH STROKE ADDS LOAD UNTIL THE VALVE OPENS; AFTER THAT THE LOAD STAYS. A VALVE SET LOW STOPS BELOW THE RATING, A STUCK ONE LETS THE LOAD CLIMB; THE LEVELS SHOWN ARE FOR ILLUSTRATION ONLY; COMPUTED, RELATIVE UNITS

## DETAIL C - TALL RAM

NOT TO SCALE - COMPUTED

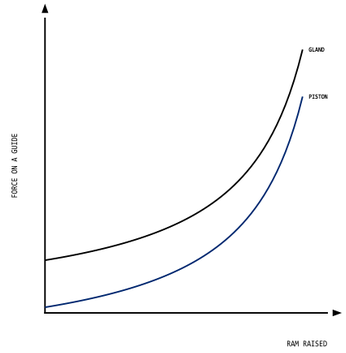


ONE SIDE FORCE, THE SAME AT EVERY HEIGHT: THE GUIDES CARRY FAR MORE WHEN THE RAM IS TALL; COMPUTED, RELATIVE UNITS: A PICTURE ONLY

REFERENCE CONFIGURATION - NOT FOR CONSTRUCTION

**NEOMETRIX DEFENCE LIMITED**
ENGINEERED IN NOIDA - INDIA

HYDRAULIC JACK TEST RIG - REFERENCE CONFIGURATION

**SEQUENCE AND CURVES**

THE ORDER OF WORK AND THE CURVES OF THE IDEA

| DWG NO | SCALE @ A3 | SHEET | REV |
|---|---|---|---|
| NMX-HJT-126-002 | NTS | 2 OF 2 | A |
| DATE | UNITS | DRAWN | STATUS |
| 28-11-2026 | TAGS ONLY | NMX-DO | REFERENCE |