ARRANGEMENT - ONE FEED IN, TWO GAS LINES OUT

NOT TO SCALE

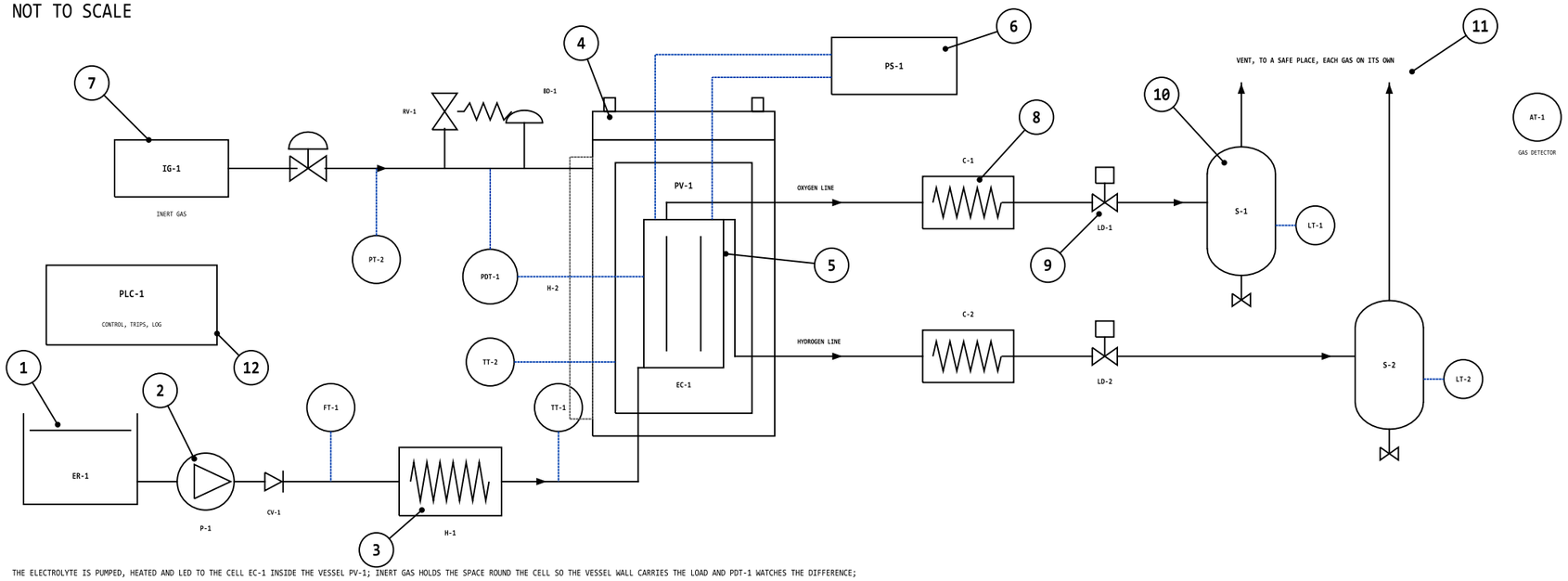

THE ELECTROLYTE IS PUMPED, HEATED AND LED TO THE CELL EC-1 INSIDE THE VESSEL PV-1; INERT GAS HOLDS THE SPACE ROUND THE CELL SO THE VESSEL WALL CARRIES THE LOAD AND PDT-1 WATCHES THE DIFFERENCE;
EACH PRODUCT GAS LEAVES IN ITS OWN LINE, IS COOLED, LET DOWN AND SEPARATED; THE TWO LINES NEVER JOIN. SENSOR SIGNALS GO TO PLC-1

NOTES

1. REFERENCE ARRANGEMENT OF A SUPERCRITICAL WATER ELECTROLYSIS TEST STAND, DRAWN FROM GENERAL PRACTICE. TAGS AND LETTERS ONLY: NO PRESSURE, TEMPERATURE, SIZE, FLOW OR CURRENT VALUE IS GIVEN.
2. THE ARRANGEMENT SHOWS ONE FEED PATH, THE VESSEL WITH THE CELL INSIDE, TWO SEPARATE GAS LINES, THE INERT GAS SUPPLY, THE RELIEF DEVICES AND THE CONTROLLER. PDT-1 IS THE PRESSURE DIFFERENCE ACROSS THE CELL WALL.
3. DETAIL A: THE VESSEL, SIMPLIFIED. DETAIL B: ONE OUTLET LINE. DETAIL C: THE IDEA OF THE INTERLOCKS, NOT A SAFETY DESIGN. NO PERSON IS DRAWN.
4. THE SEQUENCE AND THE CURVES ARE ON SHEET 002. PUMPS, VALVES, HEATERS AND INSTRUMENTS ARE BOUGHT IN. THE PRESSURE CODE, THE HAZARD STUDY AND THE INSPECTING BODY GOVERN THE DESIGN.

DETAIL A - THE VESSEL IN SECTION

NOT TO SCALE

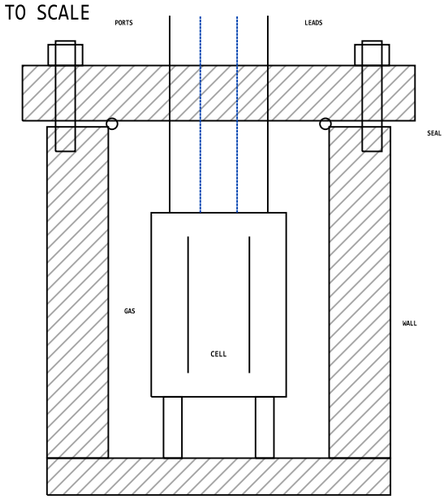

THE THICK WALL AND THE STUDDED LID HOLD THE PRESSURE.
THE CELL, WITH NEARLY EQUAL PRESSURE INSIDE AND OUT,
CAN BE LIGHT AND CAN BE OPENED AND CHANGED

DETAIL B - ONE OUTLET LINE

NOT TO SCALE

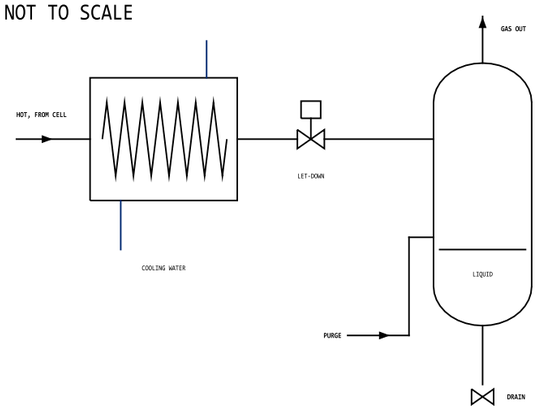

COOL FIRST, THEN LET THE PRESSURE DOWN, THEN PART THE
GAS FROM THE LIQUID. THE LET-DOWN VALVE ALSO SETS THE
LOOP PRESSURE; THE OTHER GAS HAS ITS OWN SUCH LINE

DETAIL C - INTERLOCKS

LOGIC

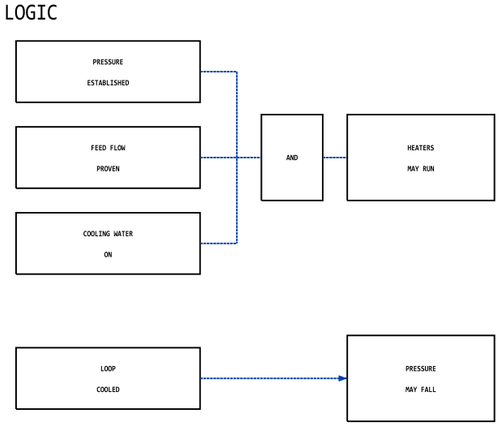

HEAT IS REFUSED UNTIL PRESSURE, FLOW AND COOLING
ARE ALL THERE; THE PRESSURE IS HELD UNTIL THE LOOP
HAS COOLED. TRIPS ALSO STOP THE CELL CURRENT

ITEMS

ITEM	DESCRIPTION
1	ELECTROLYTE RESERVOIR ER-1
2	FEED PUMP P-1, CHECK CV-1, FLOW FT-1
3	HEATER H-1
4	PRESSURE VESSEL PV-1, JACKET H-2
5	CELL UNDER STUDY EC-1
6	CELL POWER SOURCE PS-1
7	INERT GAS SUPPLY IG-1
8	COOLERS C-1, C-2
9	LET-DOWN VALVES LD-1, LD-2
10	SEPARATORS S-1, S-2
11	VENT, GAS DETECTOR AT-1
12	CONTROLLER PLC-1

REFERENCE CONFIGURATION - NOT FOR CONSTRUCTION

NEOMETRIX DEFENCE LIMITED
ENGINEERED IN NOIDA - INDIA

SUPERCRITICAL WATER ELECTROLYSIS TEST STAND - REFERENCE

ARRANGEMENT AND DETAILS

THE LOOP, THE VESSEL, ONE OUTLET LINE, INTERLOCKS

DWG NO	SCALE @ A3	SHEET	REV
NMX-SCE-127-001	NTS	1 OF 2	A
DATE	UNITS	DRAWN	STATUS
28-11-2026	TAGS ONLY	NMX-DO	REFERENCE

SEQUENCE OF WORK - ONE TEST CAMPAIGN

NOT TO SCALE

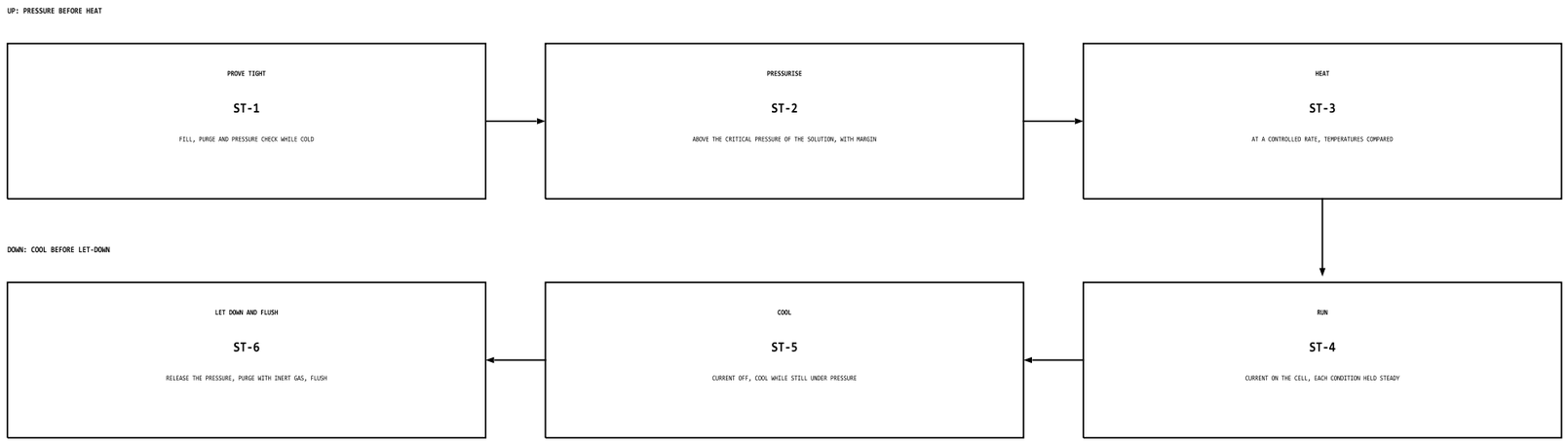

NOTES

1. REFERENCE SEQUENCE AND CURVES OF A SUPERCRITICAL WATER ELECTROLYSIS TEST STAND. TAGS AND LETTERS ONLY: NO PRESSURE, TEMPERATURE, TIME OR STRESS VALUE IS GIVEN.
2. THE SEQUENCE: PROVE TIGHT ST-1, PRESSURISE ST-2, HEAT ST-3, RUN ST-4, COOL ST-5, LET DOWN AND FLUSH ST-6. THE ARRANGEMENT IS ON SHEET 001.
3. DETAIL A IS FOR PURE WATER. DETAIL B IS SCHEMATIC. DETAIL C SHOWS THE SHAPE OF THE STRESS IN A THICK WALL UNDER INTERNAL PRESSURE ONLY: HEATING ADDS ITS OWN STRESSES.
4. THE OPERATING CONDITIONS, RATES AND LIMITS COME FROM THE RESEARCH PROGRAMME, THE PRESSURE CODE AND THE HAZARD STUDY. NOTHING HERE IS A DESIGN VALUE.

DETAIL A - WHY PRESSURE COMES FIRST (PURE WATER)

NOT TO SCALE - COMPUTED

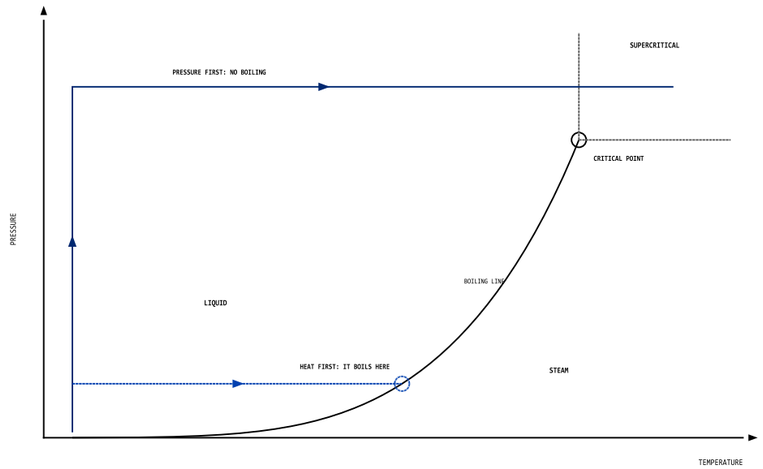

ABOVE THE CRITICAL PRESSURE THE HEATING PATH NEVER MEETS THE BOILING LINE. A DISSOLVED SALT MOVES THE CRITICAL POINT TO A HIGHER TEMPERATURE AND PRESSURE, SO A SOLUTION NEEDS ITS OWN MARGIN (NOT DRAWN). LINE COMPUTED FROM THE IAPWS-IF97 SATURATION FORMULA

DETAIL B - THE ORDER IN TIME

SCHEMATIC

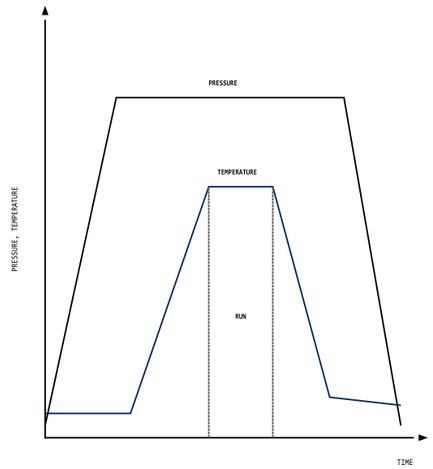

PRESSURE LEADS ON THE WAY UP AND FOLLOWS ON THE WAY DOWN: IT IS THE FIRST TO RISE AND THE LAST TO FALL

DETAIL C - IN THE WALL

NOT TO SCALE - COMPUTED

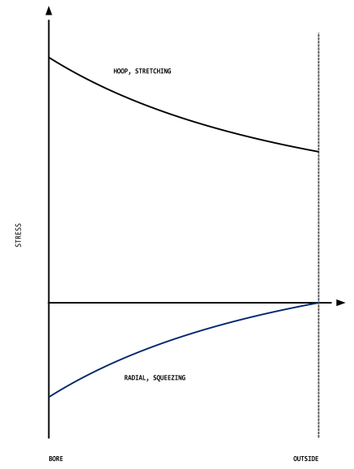

THE BORE CARRIES THE MOST. LAME'S RELATIONS, FOR AN ASSUMED WALL; NOT A DESIGN

REFERENCE CONFIGURATION - NOT FOR CONSTRUCTION

NEOMETRIX DEFENCE LIMITED
ENGINEERED IN NOIDA - INDIA

SUPERCRITICAL WATER ELECTROLYSIS TEST STAND - REFERENCE

SEQUENCE AND CURVES

THE ORDER OF WORK AND THE CURVES OF THE IDEA

DWG NO	SCALE @ A3	SHEET	REV
NMX-SCE-127-002	NTS	2 OF 2	A
DATE	UNITS	DRAWN	STATUS
28-11-2026	TAGS ONLY	NMX-DO	REFERENCE