THIS DWG. IS SOLE PROPERTYOF **NEOMETRIX ENGINEERING PVT. LTD.** UNAUTHORISED USE OF THIS DWG. OR MAKING PRODUCT AS PER THIS DWG. WITHOUT OUR PERMISSION OR ANY OTHER MISUSE IS NOT PERMITTED.

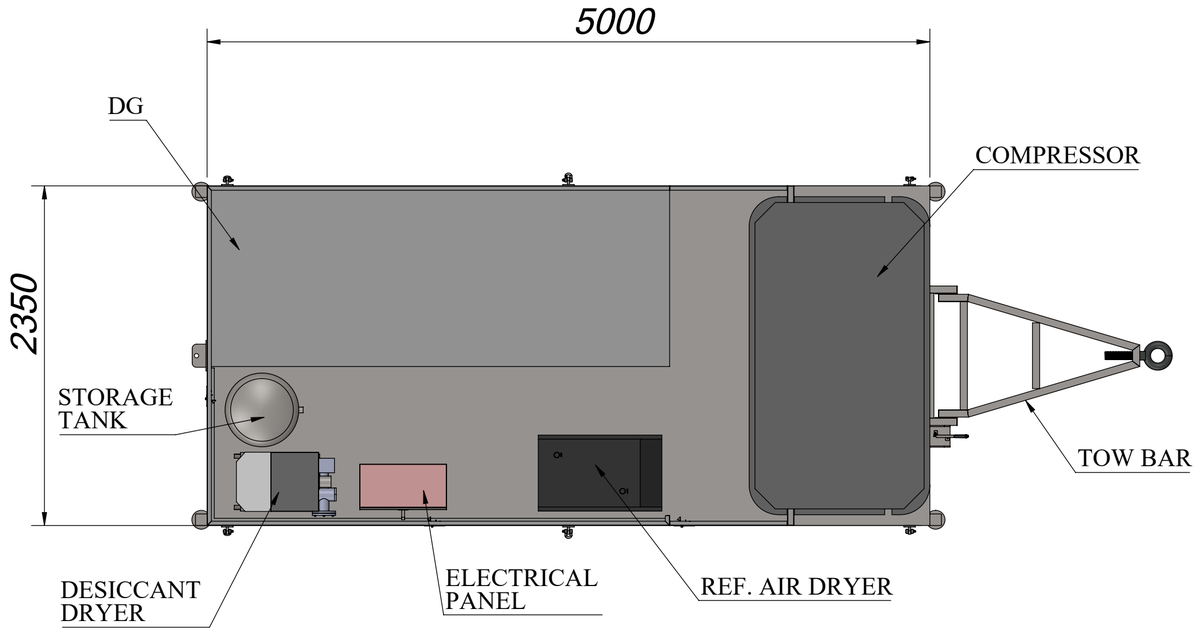

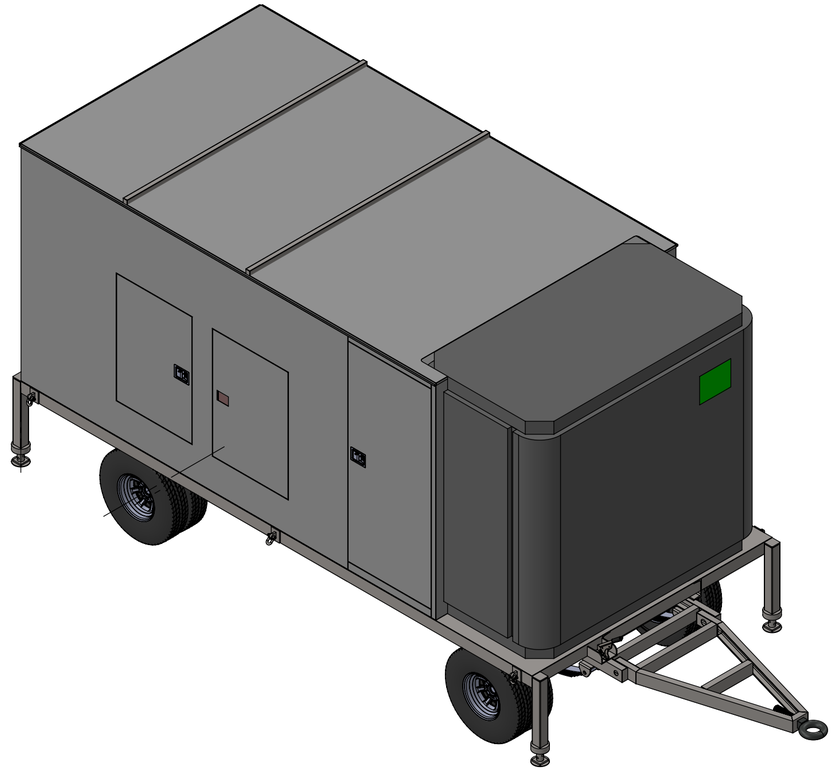

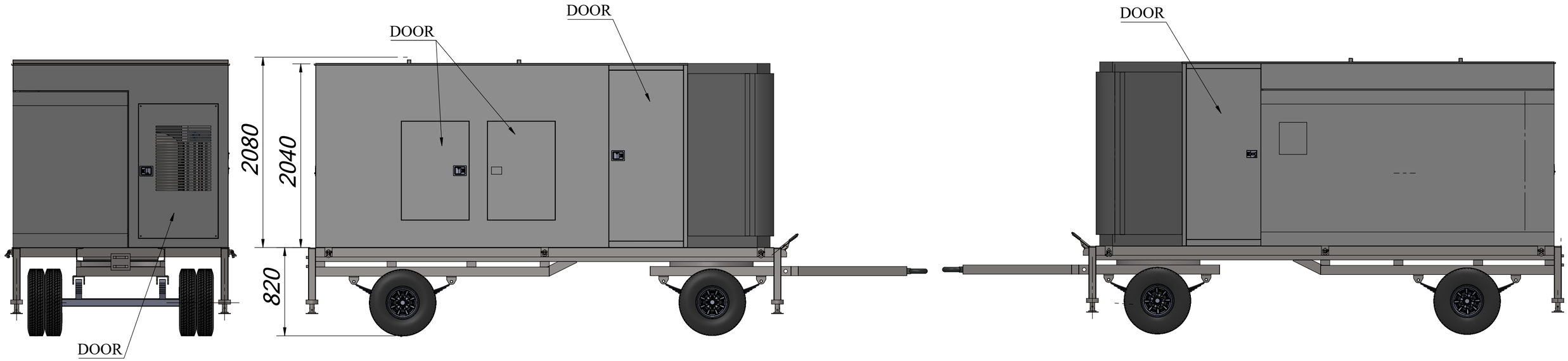

AIR COMPRESSOR TROLLEY

NOTE:-

1. ALL DIMENSIONS ARE IN MM.

NEOMETRIX

NEOMETRIX ENGINEERING PVT LTD
E-148 , SECTOR 63 , NOIDA , UP-201301
Tel No.: 0120 4500800
Fax No.: 0120 4500888
E.mail: contact@neometrixgroup.com
Design Dept.: design@neometrixgroup.com

TITLE	UGSSO2	QA No.	
SUB-TITLE	GA DRAWING (AIR COMPRESSOR TROLLEY)	Cross Ref Doc No.:	
SRS CODE	A3128	Customer Dwg Ref No.	
CUSTOMER	INDIAN AIR FORCE	NOTE :	
END USER	INDIAN AIR FORCE		
TD/PO. No.	--	DATED	

PROJECTION				SIZE	SCALE	SHEET No	SHEET Of	NEO DWG No.	REV
	DRWN	M.F	25/07/2024						
	CHK.	S.S	25/07/2024						
	APPR.	S.P.S	25/07/2024	A3	NTS	01	01	T-PED-A3128-GADWG-ACT	00